OWNER'S MANUAL

Model: UTV-65-BL-PRO (5303072)

(65 Gallon Lawn & Garden UTV Sprayer w/Boomless Boom)

Professional Grade Pump (4.0 GPM):
Ideal for Harsh Chemicals & Oil Based Chemicals with Surfactants

Long Range 13" PRO SERIES Handgun
38' Horizontal Spray & 27' Vertical

Roundup® Ready

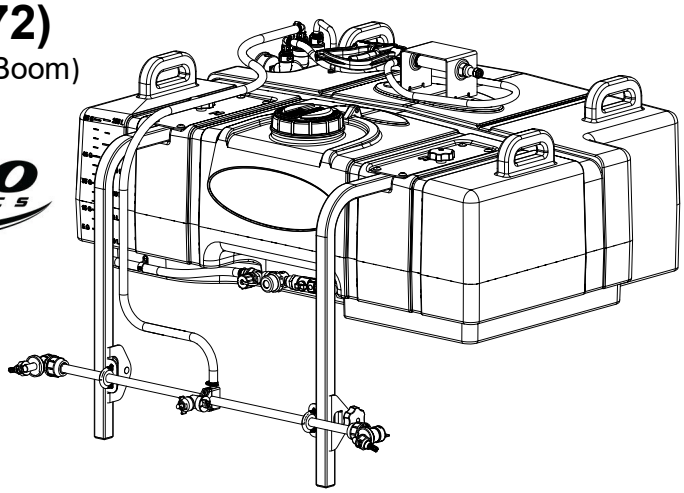

Technical Specifications

- 65 Gal. Corrosion-Resistant Polyethylene Tank
- 13" Pro Series Handgun w/25 Ft. Handgun Hose
- 30' Spray Coverage w/Boom
- Adjustable Boom Height
- Pro Series 4.0 GPM, 45 PSI, 12 Volt Pump
- Multi-Lid to accurately measure and pour chemicals

Caution: When fully filled with water, this sprayer will weigh approx. 630 lbs..
Consult the owner's manual for your vehicle to verify that you are within it's load carrying capacity.
Secure unit in your UTV, using tie-down straps (NOT INCLUDED)

General Information

Thank you for purchasing this product. The purpose of this manual is to assist you in operating and maintaining your UTV sprayer.

WARNING: To reduce the risk of injury, the user must read and understand the operator's manual before using this product.

WARNING: Cancer and Reproductive Harm
www.P65Warnings.ca.gov

BEFORE RETURNING THIS PRODUCT FOR ANY REASON, PLEASE CALL

1-800-831-0027

MONDAY-FRIDAY, 8:00 AM TO 5:00 PM CST

If you should have a question or experience a problem with your Fimco Industries Product: Visit our website @ www.fimcoindustries.com or call the Toll free number above. Our technical support representatives will be happy to help you. In most cases a customer service rep. can resolve the problem over the phone.

To obtain prompt, efficient service, always remember to give the following information....
• Correct Part Description and/or part number
• Model number and Serial Number
Part descriptions and numbers can be obtained from the illustrated parts list section(s) of this manual.

Retain a copy of your receipt for your unit, as it will be required to validate any warranty service.

Warranted against manufacturer or workmanship defects from date of purchase with copy of receipt:

Homeowner Usage: One Year.

Commercial Usage: 90 Days.

Assembly Instructions

The sprayer is partially assembled at the factory.

Follow the assembly instructions on pages 2 and 3 and hook up the wiring to an existing 12 volt power source to complete your sprayer.
Connect the electrical hook-up to the end of your pump and clip the clips to a fully charged battery.

Read the operating instructions and then run the sprayer using only water for testing. When everything tests all right, add the desired chemical mixture and water combination and start the spraying operation.

IMPORTANT REMINDER

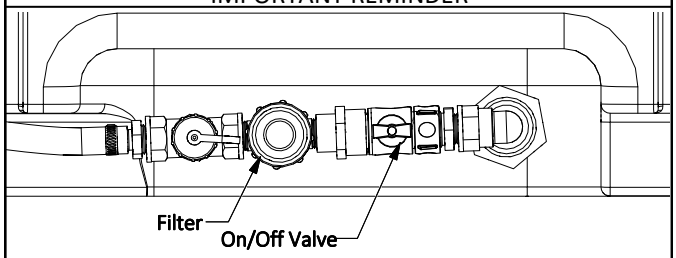

This sprayer comes with an On/Off valve located on your intake line. You must make sure the valve is in the "open" position before using your sprayer.

www.fimcoindustries.com
1000 FIMCO Lane, P.O. Box 1700, North Sioux City, SD 57049
Toll Free Phone: 800-831-0027 : Toll Free Fax: 800-494-0440

[5195266 (06/19)]

Assembly Procedure (UTV-65-BL-PRO)

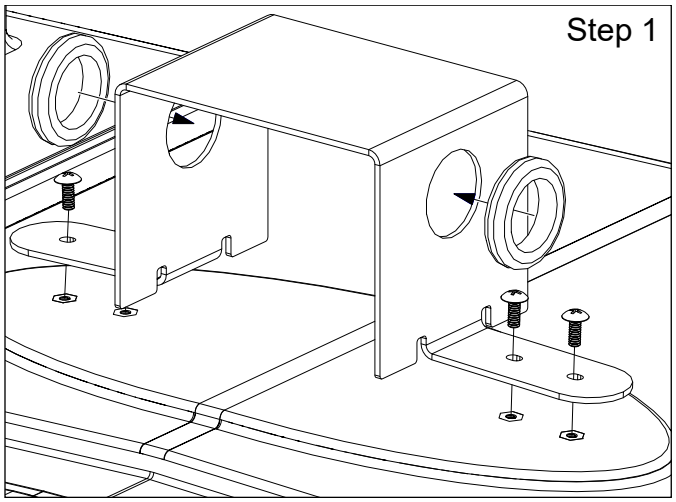

Attach the Hose Bracket to the top of the tank with (4) Phillips Head Screws and insert the (2) Grommets into the hose bracket.

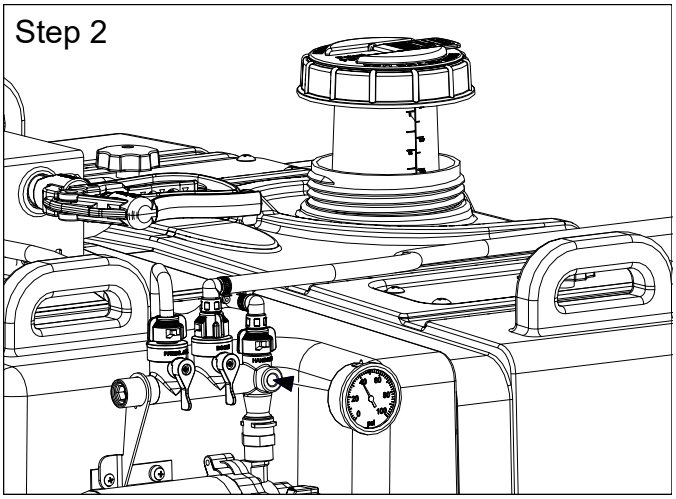

Thread Pressure Gauge into open port on manifold., as shown.

Thread Multi-Lid on to tank.

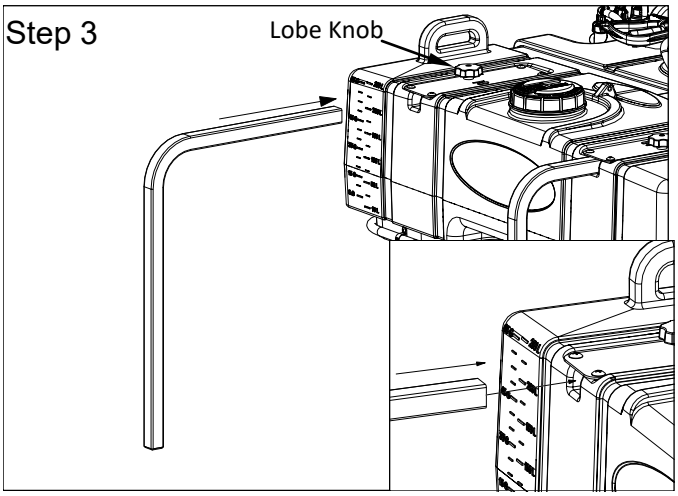

With the unit in a UTV Box, slide the boom mount tubes in to the tank mounts and tighten the lobe knob.

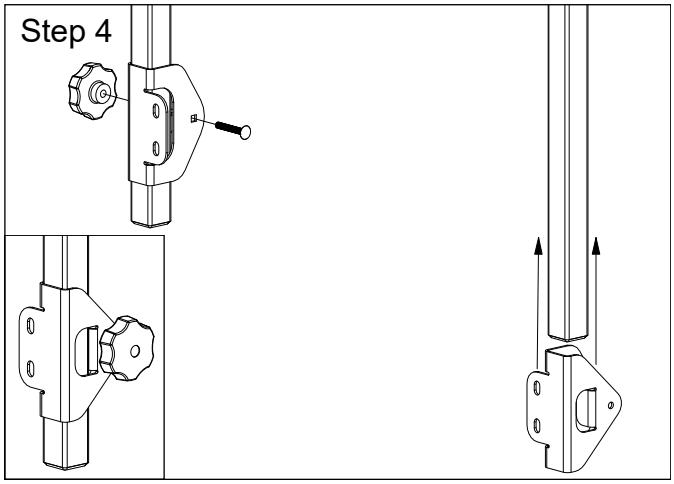

Slide the boom clamps up the boom mount tubes and install the 1/4” carriage bolt and Lobe Knob., make sure the boom clamps are installed with the square carriage bolt holes or two boom mount holes to the inside and the lobe knob to the outside.

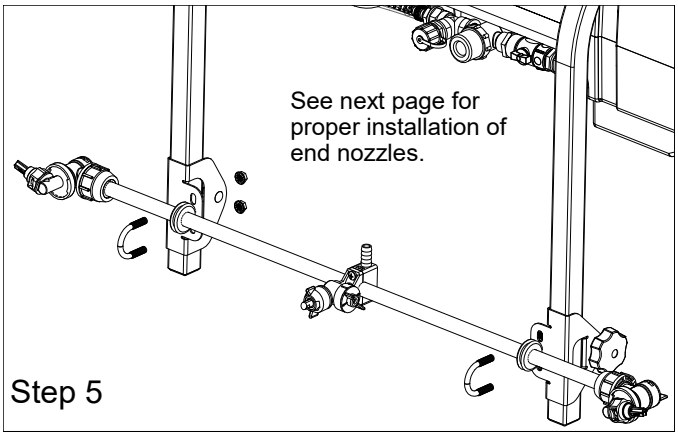

Using the square U-bolts and nuts, attach the boom to the boom clamps.
Finally attach boom hose. Slip (2) 3/8” hose clamps onto hose. Attach one end of hose to the boom and the other end to the manifold. The boom hose can be cut to length if needed.

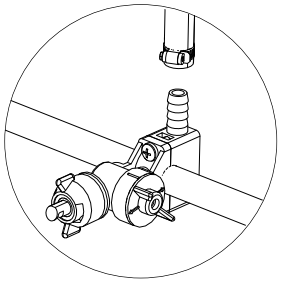

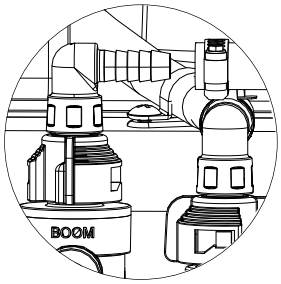

Once fully assembled, to remove the sprayer from a UTV Box, disconnect the boom supply hose from the manifold, using the quick connect fitting. Then loosen the two lobe knobs on the tank mounts and slide the boom out and set aside. Then the tank can be removed and set on the ground without damaging the tank or boom. The handles can be used to lift the empty tank in and out of the box. Tie down straps (NOT INCLUDED) can be installed through the handles to secure the tank.

End Nozzle Assembly Procedure
For Boomless “Wet” Boom

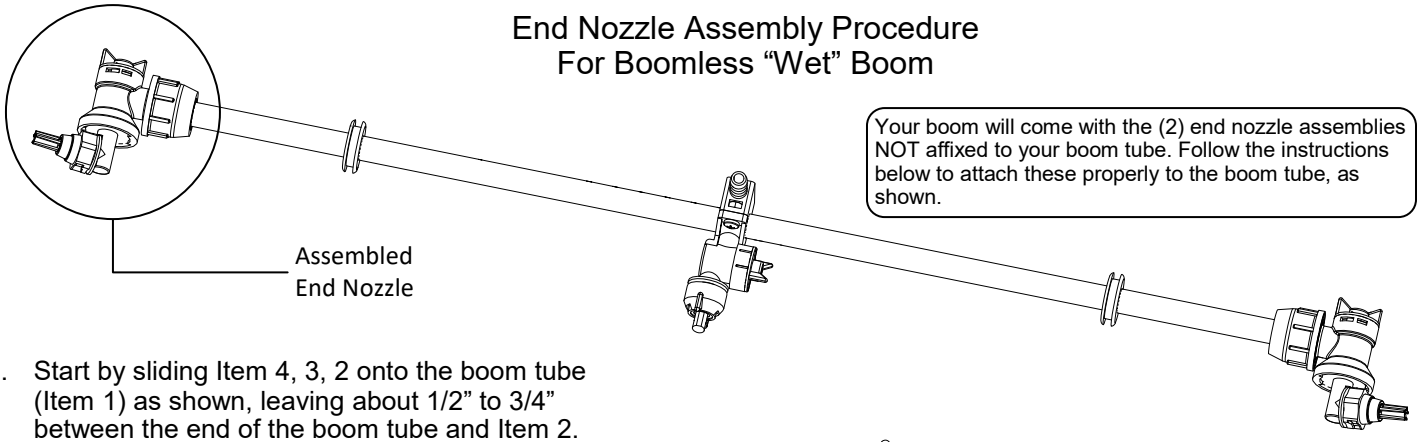

Your boom will come with the (2) end nozzle assemblies NOT affixed to your boom tube. Follow the instructions below to attach these properly to the boom tube, as shown.

1. Start by sliding Item 4, 3, 2 onto the boom tube (Item 1) as shown, leaving about 1/2” to 3/4” between the end of the boom tube and Item 2. Make sure the “Long” portion of Item 3 is facing the nozzle end.
2. Slide the (complete) end nozzle assembly onto the stainless steel boom tube, with a somewhat “twisting” motion, so that the end face of the boom tube “butts” up against the surface face inside the nozzle body.
3. Now push the “compression olive” (Item 3) against O-ring (Item 2) and slide (both) into the nozzle body opening firmly.
4. Firmly tighten flynut (Item 4) onto threads of nozzle body.

Repeat for other side.
NOTE: If water is shooting back on the boom tube, item 2 is not in the correct placement.

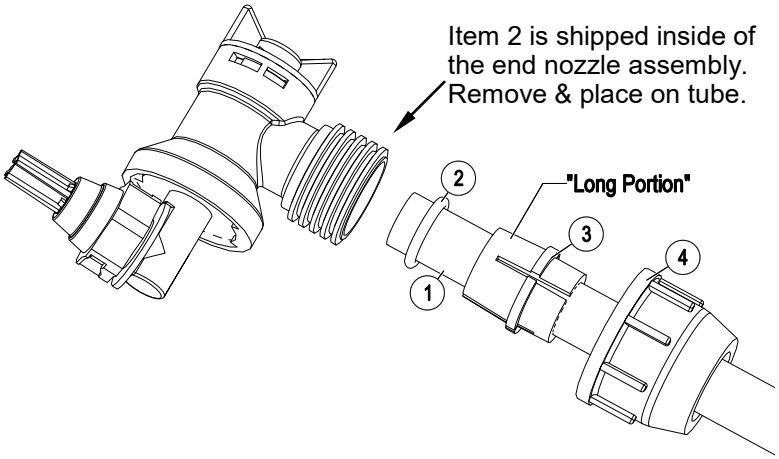

End Nozzle Information
(5275122)

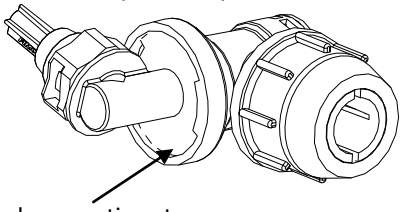

This nozzle mounting stem
Has a ratcheting motion.

** Each “click” of the ratcheting motion is approx. 15° **

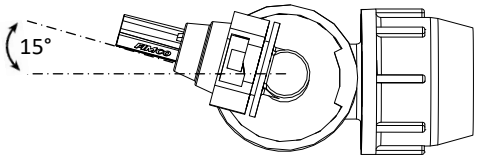

For proper/optimal spray coverage,
The nozzle must be at a 15° angle

The 15° angle shown will prevent the outer Nozzles from overlapping with the center nozzle.

“On/Off” Valve Positions

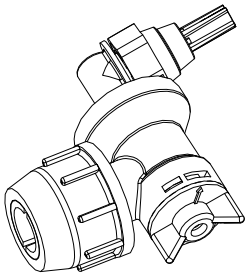

Valve “Open”

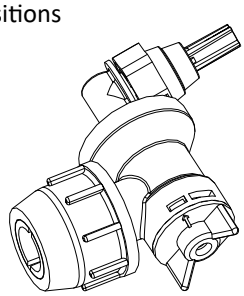

Valve “Closed”

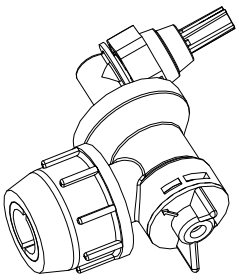

Service Position

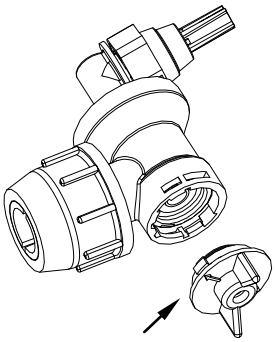

On/Off Valve Knob
Eliminate line pressure, then pull out to check diaphragm condition.

Note: The check valve & diaphragm can fall out during transport, if the knob is not turned to the “ON” or “OFF” position.

IMPORTANT: Remove tank lid and be sure the tank is clean and free of any foreign material. Rinse tank out of any tank residue before filling with water to test.

Testing the Sprayer

NOTE:
It is VERY important for you to test your sprayer with plain water before actual spraying is attempted. This will enable you to check the sprayer for leaks without the possibility of losing any expensive chemicals.

Fill the tank about 1/2 full with plain water and drive to the starting place for spraying.

When you are ready to spray, turn the boom valve to the "on" position (Detail A). This will start solution spraying from the tips of the boom. The pressure will decrease slightly when the boom is spraying.
Adjust the pressure by turning the "ON/OFF" valve lever on the bypass line valve (Detail B). Make sure your pattern is sufficient. You may down-pressure the system by 'bypassing' solution back into the tank. This is achieved by opening the bypass valve. Regulating pressure is done in this manner.

Read the operating instructions and initially begin spraying by closing the 'Pressure Adjust' valve and opening the boom line valve (Detail A). This will enable the air in the line to be eliminated (purged) through all the tips, while building pressure. When everything tests all right (no leaks and good pressure), add the desired chemicals to the mixture and water combination and start your spraying operation. Adjust the pressure and spray as you did in the testing procedure.
Conditions of weather and terrain must be considered when setting the sprayer. Do not spray on windy days. Protective clothing must be worn in some cases.

Be sure to read the chemical label(s) before application!

Operation

The pumping system draws solution from the tank, through the strainer and to the pump. The pump forces the solution under pressure to the handgun or boom nozzles.

Connect the lead wire to a fully charged 12 volt battery. You may use either a stand-alone battery or the battery on your towing vehicle. Connect to the positive (red) terminal first, then connect to the negative (black) terminal. Then connect the end of the lead wire to the end of the pump. When disconnecting, disconnect the end of the pump wire from the lead wire, then disconnect the negative (black) connection and finally the positive (red) connection. The lead wire has an On/Off switch to activate the pump. "-" is on and "O" is off.

Fill the tank part way with water and then add the desired amount of chemical to be sprayed. Finish filling tank to proper level. Turn the pump on and by depressing the "-" side of the rocker switch. The pump is equipped with a pressure switch that is pre-set at the factory to shut the pump off when all discharges are closed.

The pump will turn back on when one of the following actions occurs:

- Handgun lever is squeezed to spray the handgun.
- Boom valve is opened to broadcast spray with the boom.
- Bypass valve is opened to re-circulate solution back into the tank.

When spraying with either the boom or the handgun, pressure may be reduced by slowly opening the bypass valve until desired pressure is achieved. Opening the valve decreases pressure, closing the valve increases pressure. When spraying with the boom, the proper method to set the pressure is to open the boom valve completely and if a lower pressure is desired, then slowly open the bypass valve until that pressure is obtained.

For the safest and most efficient chemical application, you will need to calibrate your sprayer using the tip and speed charts. Once you have determined the proper speed and pressure settings, you will need to consult your chemical label for the amount of chemical to be added to the tank. Read the entire label. Use only according to label directions.

Manifold Valves CLOSED

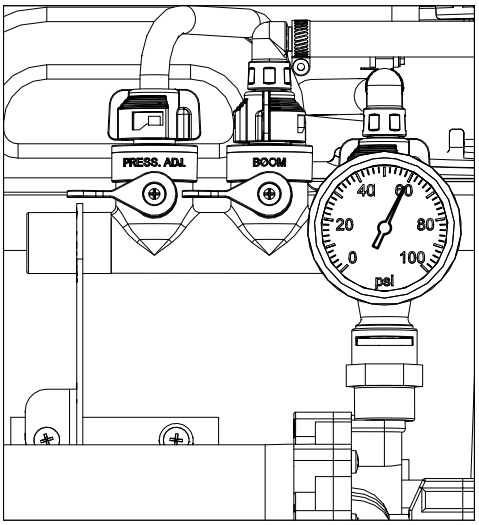

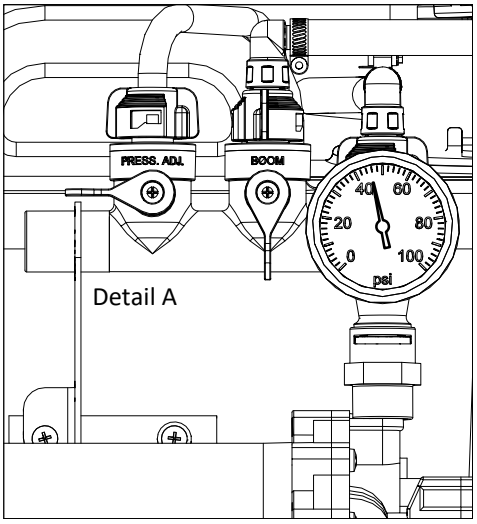

Detail A

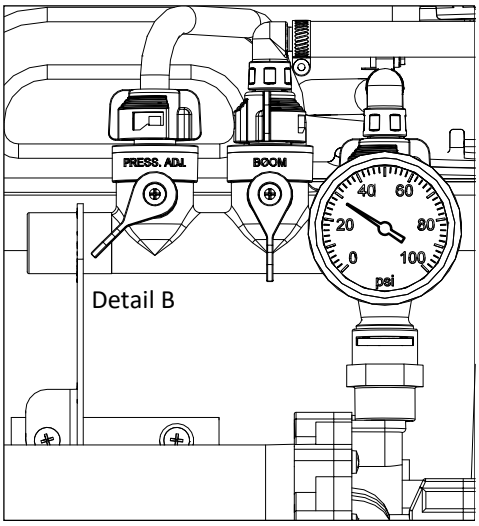

Detail B

Calibration

Chemical labels may show application rates in gallons per acre, gallons per 1000 square feet or gallons per 100 square feet. You will note that the tip chart shows 3 of these rating systems. Once you know how much you are going to spray, then determine (from the tip chart) the spraying pressure (PSI), and the spraying speed (MPH).

Determining the proper speed of the pulling vehicle can be done by marking off 100, 200 & 300 feet. The speed chart indicates the number of seconds it takes to travel the distances. Set the throttle and with a running start, travel the distances. Adjust the throttle until you travel the distances in the number of seconds indicated by the speed chart. Once you have reached the throttle setting needed, mark the throttle location so you can stop and go again, returning to the same speed.

Add water and proper amount of chemical to the tank and drive to the starting place for spraying.

Using the Boom Nozzles

Four things must be considered before spraying with the boom.

1. How much chemical must be mixed in the tank.
2. Rate of spray (gallons per acre to be sprayed).
3. What pressure (p.s.i.) will be used.
4. Speed traveled (mph) while spraying.

* Refer to the chemical label to determine your chemical mixture.
* See the tip chart to determine the pressure to be used. The chart will also show the speed used when spraying.
* Start the pump and open the valve to the boom nozzles.
* Check the spray pattern. Usually you can see the coverage better on a solid concrete surface, such as a driveway.
* Approximate height: 33”

Spray Tip Rate Chart (20" Spacing)										
Tip No.	Pressure (psi)	Capacity (GPM)	Gallons Per Acre - Based on Water							
			1 MPH	2 MPH	3 MPH	4 MPH	5 MPH	6 MPH	8 MPH	10 MPH
AIXR11002VP	15	.12	35.6	17.8	11.8	8.9	7.1	5.9	4.5	3.6
	20	.14	41.6	20.8	13.8	10.4	8.3	6.9	5.2	4.2
	30	.17	50.4	25.2	16.8	12.6	10.1	8.4	6.3	5.0
	40	.20	59.6	29.8	19.8	14.9	11.9	9.9	7.4	5.9
Tip No.	Pressure (psi)	Capacity (GPM)	Gallons Per 1000 Sq. Ft. - Based on Water							
			1 MPH	2 MPH	3 MPH	4 MPH	5 MPH	6 MPH	8 MPH	8 MPH
AIXR11002VP	15	.12		.41	.27	.20	.16			
	20	.14		.48	.32	.24	.19			
	30	.17		.58	.39	.29	.23			
	40	.20		.68	.45	.34	.27			

Maintenance During/After Spraying

Periodically check the strainer and clean the screen on your intake line.
Proper care and maintenance will prolong the life of your sprayer.

After use, drain the tank and store or dispose of chemical properly. Fill the sprayer half way with clean water. Start the pump and allow the water to pump through the entire plumbing system and nozzles. Drain and then refill half full, add the recommended amount of a good quality tank cleaner, such as FIMCO Tank Neutralizer and Cleaner. (If no tank cleaner is available, you may substitute dish soap for this step, about 1-2 oz. per gallon). Turn pump on and circulate through system for 15 minutes and then spray out through boom and handgun nozzles. Refill sprayer half way with clean water and repeat. Follow the chemical manufacturer’s disposal instructions of all wash or rinsing water.
If boom or handgun nozzles need cleaning, remove them from the sprayer and soak in warm soapy water. Clean with a soft bristled brush or toothpick if necessary. Never use a metal object. Even the slightest damage can change the flow rate and spray distribution. Water rinse and dry the tips before storing.
WARNING: Some chemicals will damage the pump valves if allowed to soak untreated for a length of time! ALWAYS flush the pump as instructed after each use. DO NOT allow chemicals to sit in the pump for extended times of idleness. Follow the chemical manufacturer’s instructions on disposal of all waste water from the sprayer.

Speed Chart			
	Time Required in seconds to travel a distance of		
Speed in M.P.H. (Miles Per Hour)	100 Ft.	200 Ft.	300 Ft.
1.0	68 sec.	136 sec.	205 sec.
2.0	34	68	102
3.0	23	45	68
4.0	17	34	51
5.0	14	27	41
6.0	11	23	34
7.0	9.7	19	29
8.0	8.5	17	26
9.0	7.6	15	23
10.0	6.8	14	20

Winter Storage

Prepare the sprayer for end-of-season storage by running RV antifreeze through the system. This will keep internal parts lubricated, protect against corrosion and keep the unit from freezing. *Note: RV antifreeze is non-toxic and biodegradable and generally safer for the environment than automotive antifreeze.*
Before storing your sprayer for winter or long term storage, thoroughly clean and drain it as much as possible. Then pour enough pink RV antifreeze into the tank so that when the pump is turned on you can pump the antifreeze throughout the entire plumbing system, including the bypass. Make sure to operate the boom and handgun until you see pink fluid spraying from the nozzles. Leave any remaining antifreeze in the tank. Before your next usage, rinse the antifreeze from the sprayer with clean water.
It is nearly impossible to drain all of the water from the sprayer and any trapped water can freeze in cold weather and damage parts of the sprayer. Pumping the antifreeze through the system will displace the water and help prevent this damage.
Removing from storage: drain the antifreeze. Fill the tank with fresh water and run through the system. Dispose of antifreeze and flush water properly.

There is a shut-off valve on the intake line. It is at this location so you can shut off the flow of solution to access your system’s filter screen for cleaning.

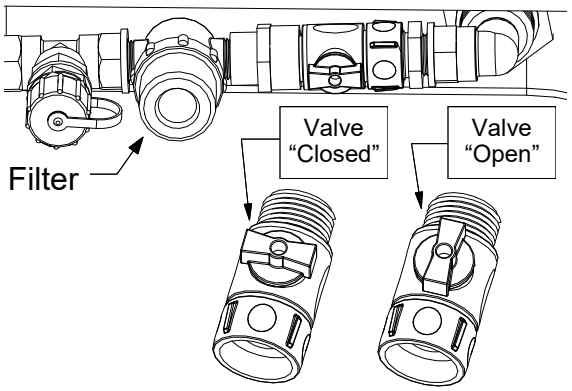

Checking/Cleaning the sprayer’s filter/screen:

- Start your pump and before it shuts off, reach down and shut the valve to the ‘Closed’ position (lever is perpendicular to the flow of fluid), then shut off your pump.
- Unscrew the bowl of the filter to access the screen.
- Remove the screen and clean as necessary. Replace when done and reassemble the entire assembly.
- Make sure the valve is turned to the ‘Open’ position before restarting your pump.

Long Range Pro Series Handgun

• No Drip Shut Off • Easy Pull Trigger Handle • Chemical Resistant Construction
• 38’ Horizontal Throw & 27’ Vertical Throw

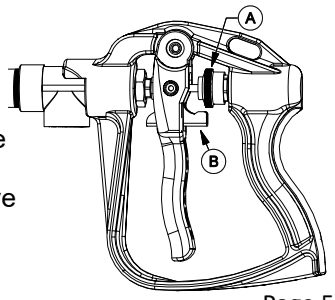

To adjust the spray pattern, the nut needs to be adjusted (Ref. A). Spinning it off, towards the lever, will make a cone pattern and spinning it on, away from the lever, will make a stream. The lever (Ref. B), is the lock that can be used to lock the lever when pulled, holding the valve open. Squeezing the trigger, will release the lock.

4.0 GPM Pump
Model: 5151073
Available Replacement Parts

Ref. #	Mfg. #	Description
1	94-230-55	Switch Assembly
2	94-237-05	Check Valve Assembly
3	94-231-30	Upper Housing
4	94-232-05	Valve Assembly
5	94-238-21	Drive Assembly
	5075019	Grommets/Pkg of 4

STOP WARNING STOP

- DO NOT USE WITH FLAMMABLE OR COMBUSTIBLE LIQUIDS
- DO NOT STORE FLAMMABLE OR COMBUSTIBLE LIQUIDS

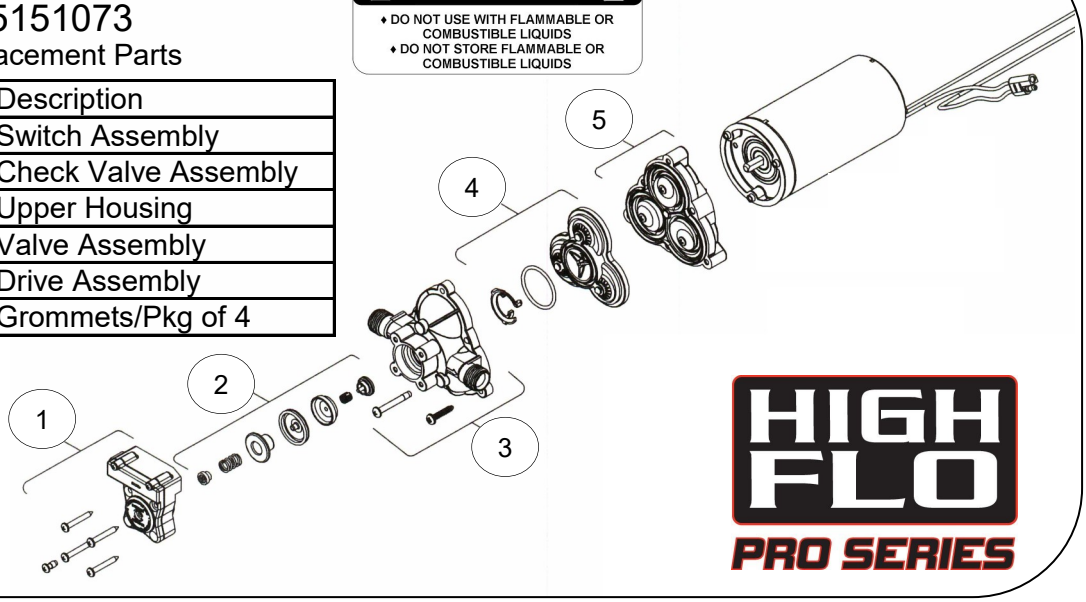

Replacement Pump: 5281326

HIGH FLO PRO SERIES

DO

- Clean and rinse your pump after each use with Fimco Tank Neutralizer
- Winterize your pump or sprayer by rinsing, draining and running RV Antifreeze through it before storing for the winter.
- Use clean water for your spray mixture
- Store inside a building when not in use.

DON'T

- Use to pump bleach.
- Use to pump petroleum products such as diesel fuel, gasoline or kerosene
- Leave your pump sit with spray mixture in it for extended periods
- Use dirty or unfiltered water for spraying

CAUTION

PRESSURE SWITCH OPERATION
Pressure switch is pre-set at the factory. Improper adjustment of the pressure switch, may cause severe overload or premature failure. If the pump is subjected to rapid cycling during normal operation, or infrequent periods, damage may occur.

Troubleshooting the Pump:

Motor does not run:
- Check for loose wiring connection(s).
- Make sure the 'ON/OFF' switch in the lead wire assembly is in the 'ON' position. "I" is the 'ON' position and 'O' is the 'OFF' position.
- Check for defective pressure switch. Make sure you are connected to a good 12 volt power source. Make sure any on/off switches are in the 'on' position. Pull both wires out of their connections, using a needle nose pliers if needed, and using a piece of wire, short the two wires together. If your pump runs when you do this, your pressure switch will need to be replaced.
- Check the fuse.
- Check for low voltage at the power supply.

Pump does not prime:
- Check for air leaks in supply line.
- Check for debris in the check valve assembly.
- Check for defective check valve.
- Check for clogged strainer/filter.
- Check for cracks in the pump housing.
- Check for empty product supply.

Low Pressure/Low Flow:
- Check for leaks in the discharge line.
- Check for restriction in the discharge line.
- Check for debris in nozzle orifice.
- Check for clogged strainer.
- Check for proper voltage—try another 12-volt battery.

Pulsating flow (surging):
- Low flow may cause pump to surge.
- Spray wand is adjusted for a small or fine spray pattern.
- Slightly open bypass (if applicable) to overcome.
- If needed, pressure switch may need to be adjusted—adjust a quarter turn at a time clockwise until surging stops.
- Check for defective pressure switch.
- Check for leaks in the discharge line.
- Check for restriction in the discharge line.
- Check for debris in nozzle orifice.
- Discharge hose may be too long.
- Check for clogged strainer.

Motor continues to run after discharge is shut off:
- Check for empty product supply.
- Check for open bypass valve. (if equipped)
- Check for low voltage.
- Check for leak in discharge line.
- Check for defective pressure switch.
- System has leaks.

Fuse blows:
- Excessive voltage.
- Improper adjustment of pressure switch.
- Damaged or defective wiring harness.
- Half-moon & counterweight are sticking.
- Defective pressure switch.

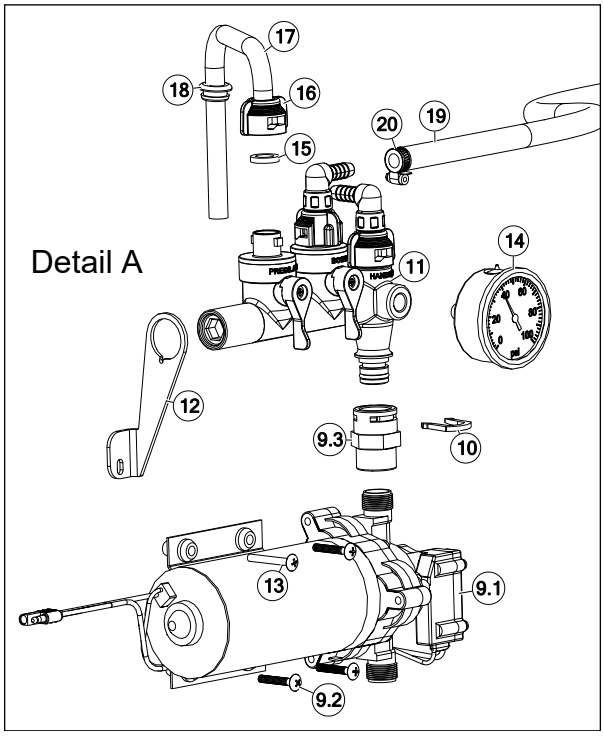

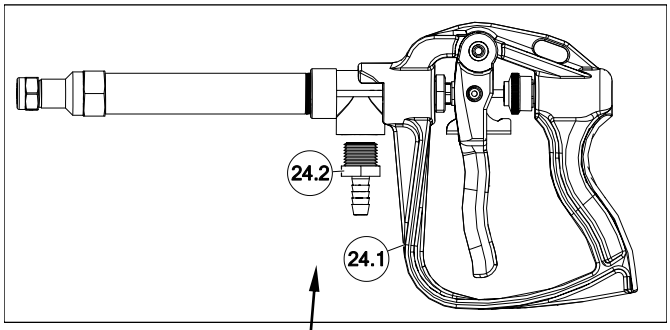

Exploded View UTV-65-BL-PRO (5303072)

Refer to Parts List Next Page for Part Numbers

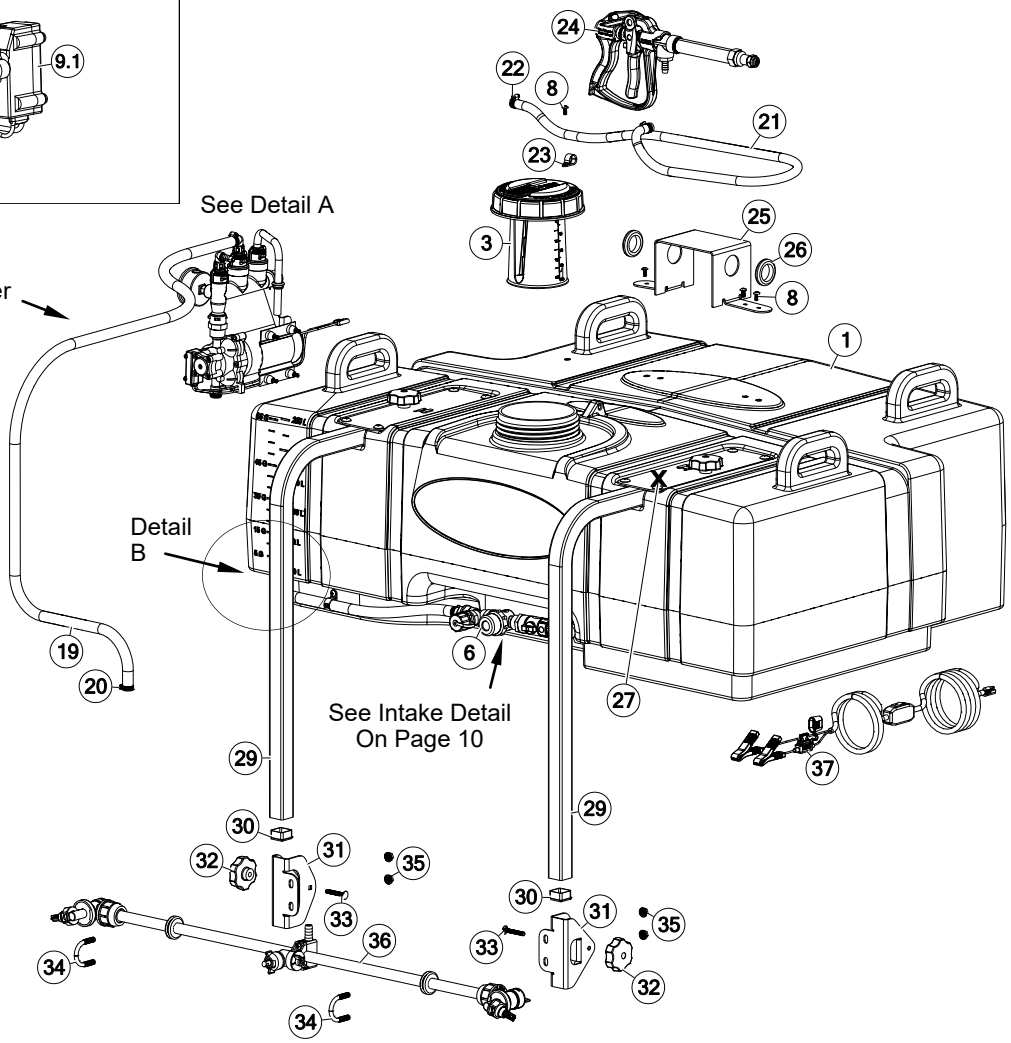

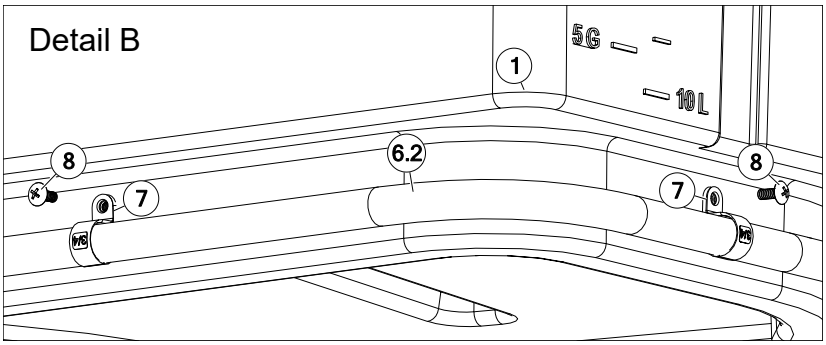

Refer to Page 10 for the UTV intake assembly breakdown. Reference #6.

Parts List: UTV-65-BL-PRO (5303072)

Ref. #	Part #	Description	Qty
1	5169325	65 Gallon UTV Tank w/Bulkhead Fitting	1
1.1	TF50DTN	Polypro 1/2" FEM Bulkhead Fitting	1
2	5010205	Poly Elbow, 1/2" MNPT x 3/4" HB	1
3	5058200	32 oz -1000 ml Multi-LID Complete Assembly	1
4	5010243	Poly Street Elbow, (90°) 1/2" MNPT x 1/2" FNPT	1
5	5005195	Poly Adapter, 1/2" MNPT x 3/4" MGHT	1
6	5281072	65 Gallon UTV Intake Plumbing (ShurFlo Pump)	1
6.1	5278717	UTV Intake Plumbing	1
6.1.1	5143419	Swivel Shut-Off	1
6.1.2	5016066	1" Rubber Washer	1
6.1.3	5005190	Poly Adapter Coupler, 3/4" FGHT x 1/2" FNPT	1
6.1.4	5116417	Poly Inline Strainer 1/2" MNPT	1
6.1.4.1	5046451	Poly Strainer Cap, 1/2" MNPT	1
6.1.4.2	5072533	Strainer O-Ring	1
6.1.4.3	5116452	Strainer Screen	1
6.1.4.4	5058205	Clear Strainer Bowl	1
6.1.5	5010230	Poly Tee, 1/2" FNPT	1
6.1.6	5005195	Poly Adapter, 1/2" MNPT x 3/4" MGHT	1
6.1.7	5274373	Drain Plug Assembly	1
6.1.8	5067131	Poly Fitting, 1/2" MNPT x 1/2" HB	1
6.2	5020568	1/2" Polyspring Hose x 44"	1
6.3	5051114	Hose Clamp, 1/2"	2
6.4	5002502	Fitting, 1/2" FNPT x 1/2" Swivel HB	1
7	5051152	3/4" Black Nylon Loom Clamp	2
8	5117234	#10-24 x 1/2" Phillips Truss Head Machine Screw	7
9	5281520	Pro Series 4.0 Pump Assembly	1
9.1	5151073	Pro Series Pump: 12V, 4.0 GPM, 45 PSI	1
9.2	5117166	#10-24 x 1 1/4" Phillips Truss Head Screw	3
9.3	5005456	3/4" Port to 1/2" Female NPT Adapter	1
10	5005457	Port Adapter Clip	1
11	5278781	Quick Connect Manifold Assembly	1
11.1	5302347	Quick Connect Manifold (Body Only)	1
11.2	5302354	QC Manifold 1/2 Swivel 90° Elbow Assembly	1
11.3	5302802	QC Manifold 3/8 Swivel 90° Elbow Assembly	1

Ref. #	Part #	Description	Qty
12	5037943	Manifold Support Brace	1
13	5117166	#10-24 x 1 1/4" Phillips Truss Head Screw	1
14	5167108	2 1/2" Liquid Filled Back Mount Gauge 0-100 PSI	1
15	5143430	Flat Washer - Hose Barb Seal	1
16	5143429	Quick Connect Quarter Turn Cap	1
17	5149157	Rigid By-Pass Tube Assembly	1
18	5075018	Grommet, 1/2" ID	1
19	5020152	Hose, 1/2"-1 Brd. x 6 Ft. (72")	1
20	5051114	Hose Clamp, 1/2"	2
21	5020527	Hose, 3/8"-1 Brd. x 25 Ft.	1
22	5051144	Hose Clamp, 3/8"	2
23	5051122	5/8" Black Nylon Loom Cable Clamp	1
24	5163149	13" HP Spray Gun with 3/8" Hose Barb	1
24.1	5163137	High Pressure Aluminum Spray Gun 13"	1
24.2	5067130	Poly Fitting, 1/2" MNPT x 3/8" HB	1
25	5038932	UTV Pro Hose Bracket	1
26	5075014	Rubber Grommet (Black)	2
27	5278715	UTV Boom Mount	2
27.1	5095394	Tank Boom Mount	1
27.2	5095393	Boom Clamp	1
27.3	5088026	5 Lobe Knob 1/4-20UNC	1
27.4	5034527	1/4-20nc x 1.5" Carriage Bolt	1
28	5117342	5/16"-18 x 1/2 Mach. Screw, Plillip Truss Head Screw	8
29	5095395	UTV Boom Mount	2
30	5046448	Square Cap, Black (1 1/4" Square)	4
31	5051151	Boom Clamp	2
32	5088026	5 Lobe Knob 1/4-20UNC	2
33	5034807	1/4-20nc X 1.75" Carriage Bolt	2
34	5034220	5/16-18 x 1.3125 x 1.75 Round U-Bolt, Gr. 2	2
35	5006307	5/16-18nc Hex Flanged Whiz Nut Gr. 5	4
36	5275260	"Wet Boom" Assembly	1
37	5277040	Lead Wire Assembly (14 ga, w/Switch), 120"	1
37.1	5157238	15 Amp Regular Blade Fuse	1

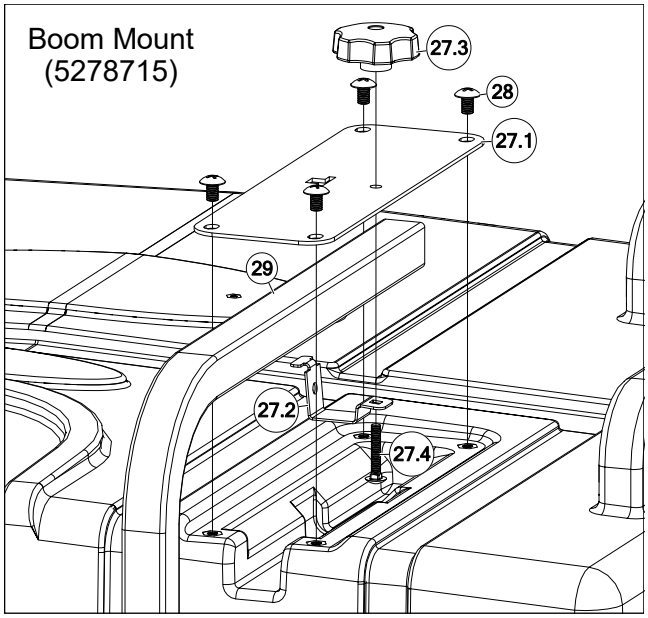

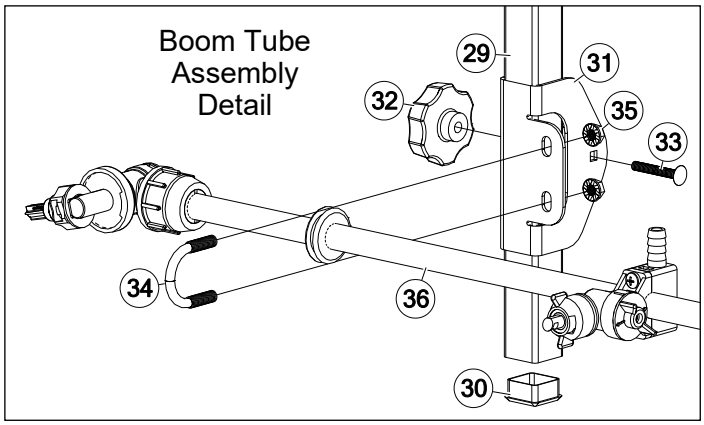

Troubleshooting a leaking quick connect elbow:

look inside the cap, you'll see a hexagon shape behind the flat washer, using an allen wrench, head of a bolt or a flat head screwdriver, something just big enough to catch the edges, and while holding the elbow and cap, give it a snug twist clockwise to tighten.
The elbow is a two-piece interlocking mechanism and if loose, will leak.

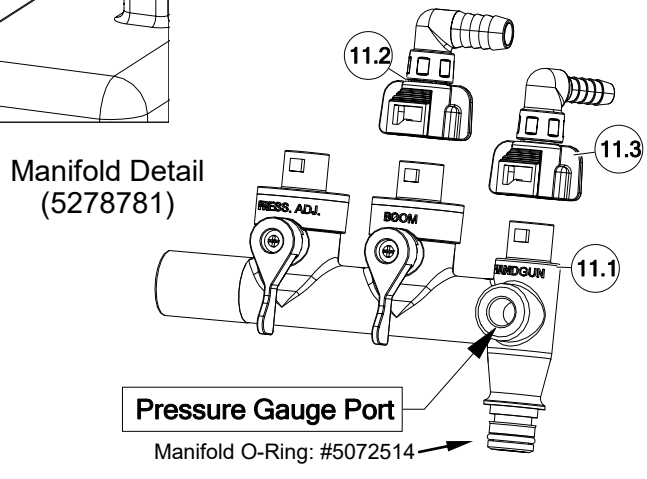

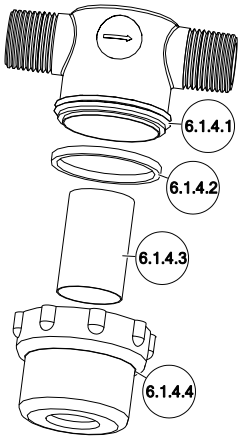

Boomless “Wet” Boom Assembly Exploded View/Parts List (5275260)

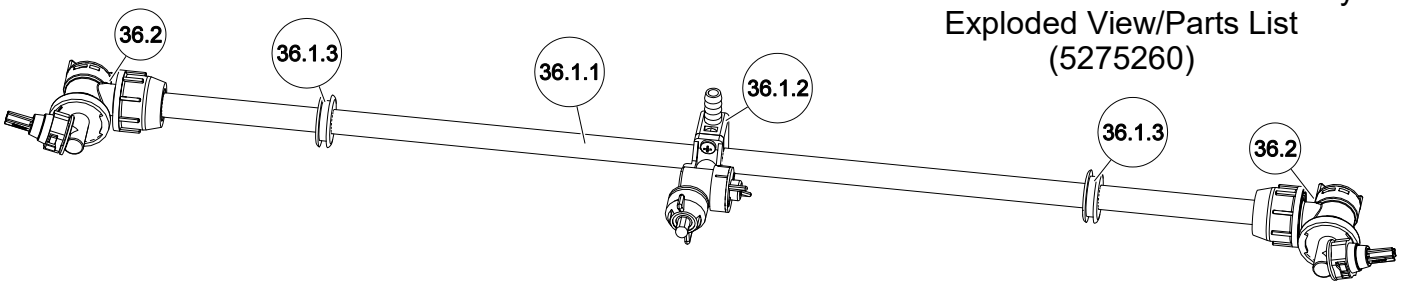

Ref. #	Part #	Description	Qty
36	5275260	"Wet Boom" Assembly	1
36.1	5275712	Wet Boom Sub-Assembly	1
36.1.1	5100316	Boom Tube	1
36.1.2	5275123	Center Nozzle Assembly (Wet Boom)	1
36.1.2.1	5274862	Center Boomless Nozzle Cap w/Gasket	1
36.1.2.2	5018329	Center Spray Tip	1
36.1.2.3	5088024	Valve (On/Off) Knob w/Diaphragm	1

Ref. #	Part #	Description	Qty
36.1.2.3.1	5063255	Diaphragm	1
36.1.3	5075016	Rubber Grommet	2
36.2	5275122	End Nozzle Assembly (Wet Boom)	2
36.2.1	5274861	XT Spray Nozzle, Cap, & O-Ring	1
36.2.2	5088024	Valve (On/Off) Knob w/Diaphragm	1
36.2.2.1	5063255	Diaphragm	1

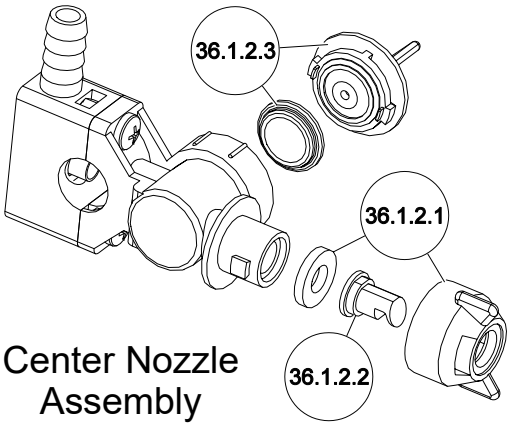

Center Nozzle Assembly

End Nozzle Assembly

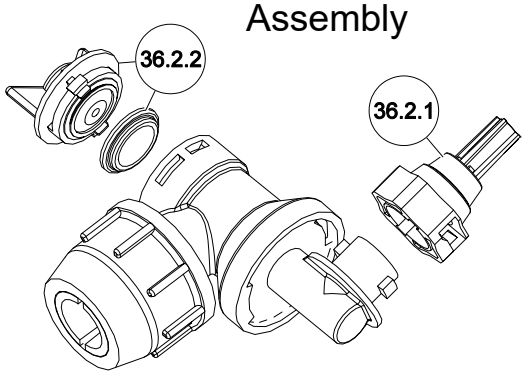

- The (3) nozzles are fixed at 17-1/2” spacing
- All (3) nozzles spraying at the same time will allow a maximum coverage of 30 feet
- The center nozzle will spray an 80” swath
- Each of the (3) nozzles has a shutoff valve, so you can shut off each nozzle individually. This may help in achieving the actual coverage needed for your application.

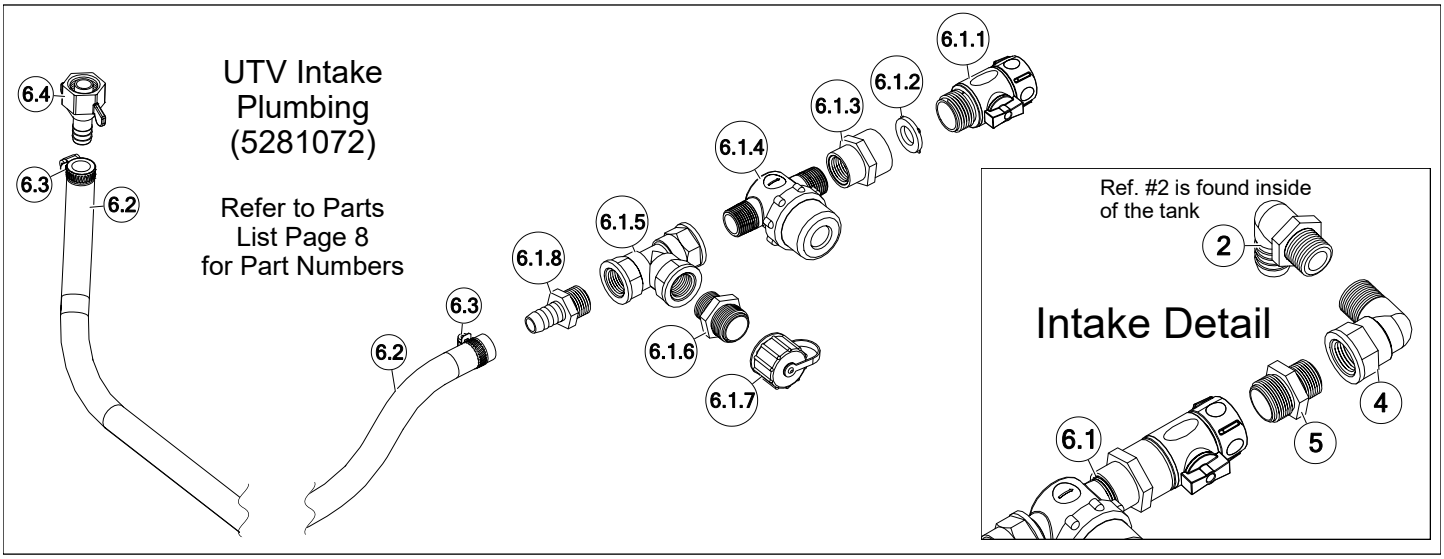

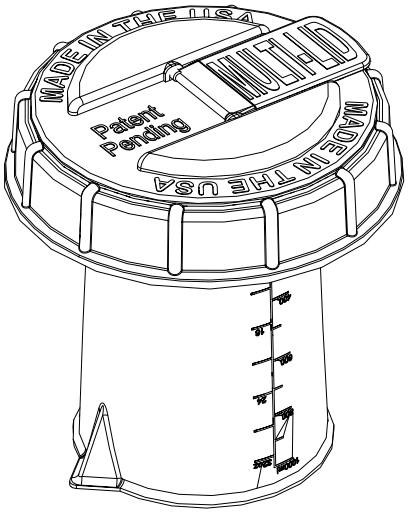

Multi-Lid Directions

1. Open fill cap and place garden hose into tank. Fill tank to desired gallon marker, if marker is above the bottom of calibration container, stop before water reaches calibration container. This is done to help chemical mix better and keep foaming of chemical to a minimum later.
2. Remove Multi-Lid and use calibration container to measure the correct amount of chemical for the water being used.
3. Pour chemical into tank and tighten Multi-Lid back onto tank. If desired amount of water was added in step 1, you are done. Be sure to press firmly on fill cap to seal with Multi-Lid. If desired amount of water was not met in step 1, proceed to step 4.
4. Open fill cap and place garden hose into tank. Add water to the desired gallon marker. Close fill cap, pressing firmly to seal cap to Multi-Lid.

NOTE: If water and chemical has not mixed properly, use the pressure adjustment control on the manifold to recirculate the mixture through tank.

Technical Specifications

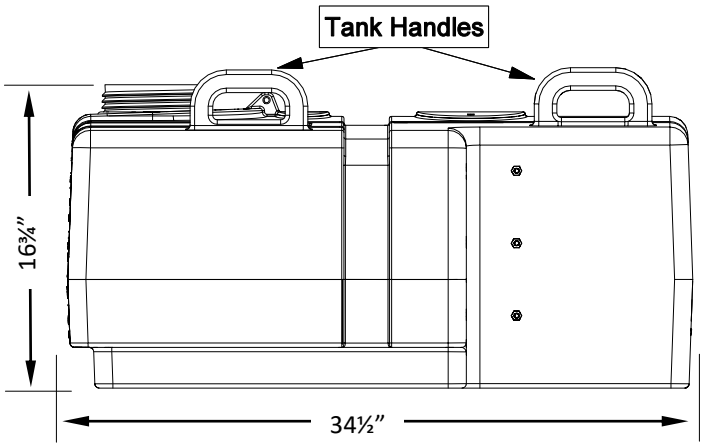

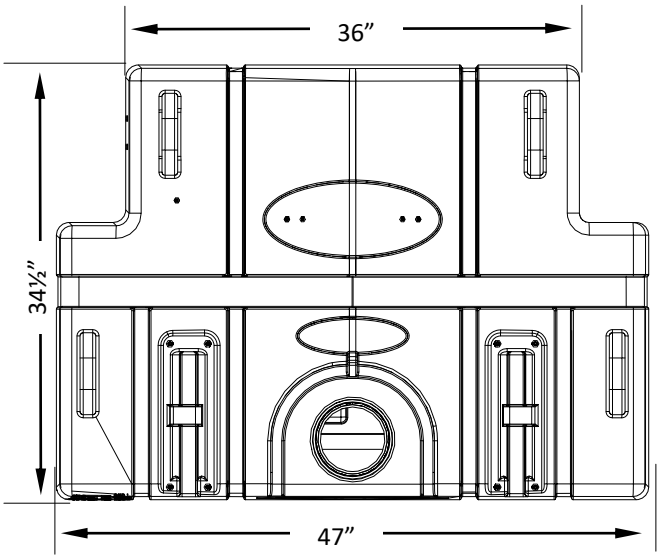

- Properly secure the tank to your utility vehicle, using tie-down or ratchet straps (Not Included).
- Tank straps may be installed through the handles to help prevent straps from slipping off tank if too loose.
- Handles can be used to lift the <u>empty</u> tank in and out of the box.
- Stay within your utility vehicle’s weight limits. This unit when filled with water weighs approx.: <u>630 lbs.</u> Consult the owner’s manual for your vehicle.

NOTES:

Warranty

LIMITED WARRANTY FOR NEW FIMCO, IND. EQUIPMENT

WHO MAY USE THIS LIMITED WARRANTY. This limited warranty (the "Limited Warranty") is provided by Fimco, Ind. to the original purchaser ("you") of the Equipment (as defined below) from Fimco, Ind. or one of Fimco, Ind.'s authorized dealers. This Limited Warranty does not apply to any subsequent owner or other transferee of the Equipment. THIS LIMITED WARRANTY GIVES YOU SPECIFIC LEGAL RIGHTS, AND YOU MAY ALSO HAVE OTHER RIGHTS WHICH VARY FROM STATE TO STATE.

WHAT THIS LIMITED WARRANTY COVERS AND FOR HOW LONG. Fimco, Ind. warrants that any new Equipment will be free from defects in material and workmanship for a period of **one (1) year** for homeowner, **90 days** for commercial user, after delivery of the Equipment to you (the "Warranty Period"). The Warranty Period is not extended if Fimco, Ind. repairs or replaces the Equipment.

WHAT IS NOT COVERED BY THIS LIMITED WARRANTY. This Limited Warranty does not apply to: (1) used Equipment; (2) any Equipment that has been altered, changed, repaired or treated since its delivery to you, other than by Fimco, Ind. or its authorized dealers; (3) damage or depreciation due to normal wear and tear; (4) defects or damage due to failure to follow Fimco, Ind.'s operator's manual, specifications or other written instructions, or improper storage, operation, maintenance, application or installation of parts; (5) defects or damage due to misuse, accident or neglect, "acts of God" or other events beyond Fimco, Ind.'s reasonable control; (6) accessories, attachments, tools or parts that were not manufactured by Fimco, Ind., whether or not sold or operated with the Equipment; or (7) rubber parts, such as tires, hoses and grommets.

HOW TO OBTAIN WARRANTY SERVICE. To obtain warranty service under this Limited Warranty, you must (1) provide written notice to Fimco, Ind. of the defect during the Warranty Period and within **thirty (30)** days after the defect becomes apparent or the repair becomes necessary, at the following address: Fimco, Ind., 1000 Fimco Lane, North Sioux City, SD 57049; and (2) make the Equipment available to Fimco, Ind. or an authorized dealer within a reasonable period of time. For more information about this Limited Warranty, please call: **800-831-0027**.

WHAT REMEDIES ARE AVAILABLE UNDER THIS LIMITED WARRANTY. If the conditions set forth above are fulfilled and the Equipment or any part thereof is found to be defective, Fimco, Ind. shall, at its own cost, and at its option, either repair or replace the defective Equipment or part. Fimco, Ind. will pay for shipping and handling fees to return the repaired or replacement Equipment or part to you.

LIMITATION OF IMPLIED WARRANTIES AND OTHER REMEDIES. THE REMEDIES DESCRIBED ABOVE ARE YOUR SOLE AND EXCLUSIVE REMEDIES, AND FIMCO, IND.'S SOLE LIABILITY, FOR ANY BREACH OF THIS LIMITED WARRANTY. TO THE EXTENT APPLICABLE, ANY IMPLIED WARRANTIES, INCLUDING, WITHOUT LIMITATION, THE IMPLIED WARRANTIES OF MERCHANTABILITY AND FITNESS FOR A PARTICULAR PURPOSE, SHALL BE LIMITED IN DURATION TO THE WARRANTY PERIOD, AND THE REMEDIES AVAILABLE FOR BREACH THEREOF SHALL BE LIMITED TO THE REMEDIES AVAILABLE UNDER THIS EXPRESS LIMITED WARRANTY. SOME STATES DO NOT ALLOW LIMITATIONS ON HOW LONG AN IMPLIED WARRANTY LASTS, SO THE ABOVE LIMITATION MAY NOT APPLY TO YOU. IN NO EVENT SHALL FIMCO, IND.'S LIABILITY UNDER THIS LIMITED WARRANTY EXCEED THE ACTUAL AMOUNT PAID BY YOU FOR THE DEFECTIVE EQUIPMENT, NOR SHALL FIMCO, IND. BE LIABLE, UNDER ANY CIRCUMSTANCES, FOR ANY CONSEQUENTIAL, INCIDENTAL, SPECIAL OR PUNITIVE DAMAGES OR LOSSES, WHETHER DIRECT OR INDIRECT. SOME STATES DO NOT ALLOW THE EXCLUSION OR LIMITATION OF INCIDENTAL OR CONSEQUENTIAL DAMAGES, SO THE ABOVE LIMITATION OR EXCLUSION MAY NOT APPLY TO YOU.