9-200 (5300655)

200 GALLON SKID MOUNTED SPRAYER
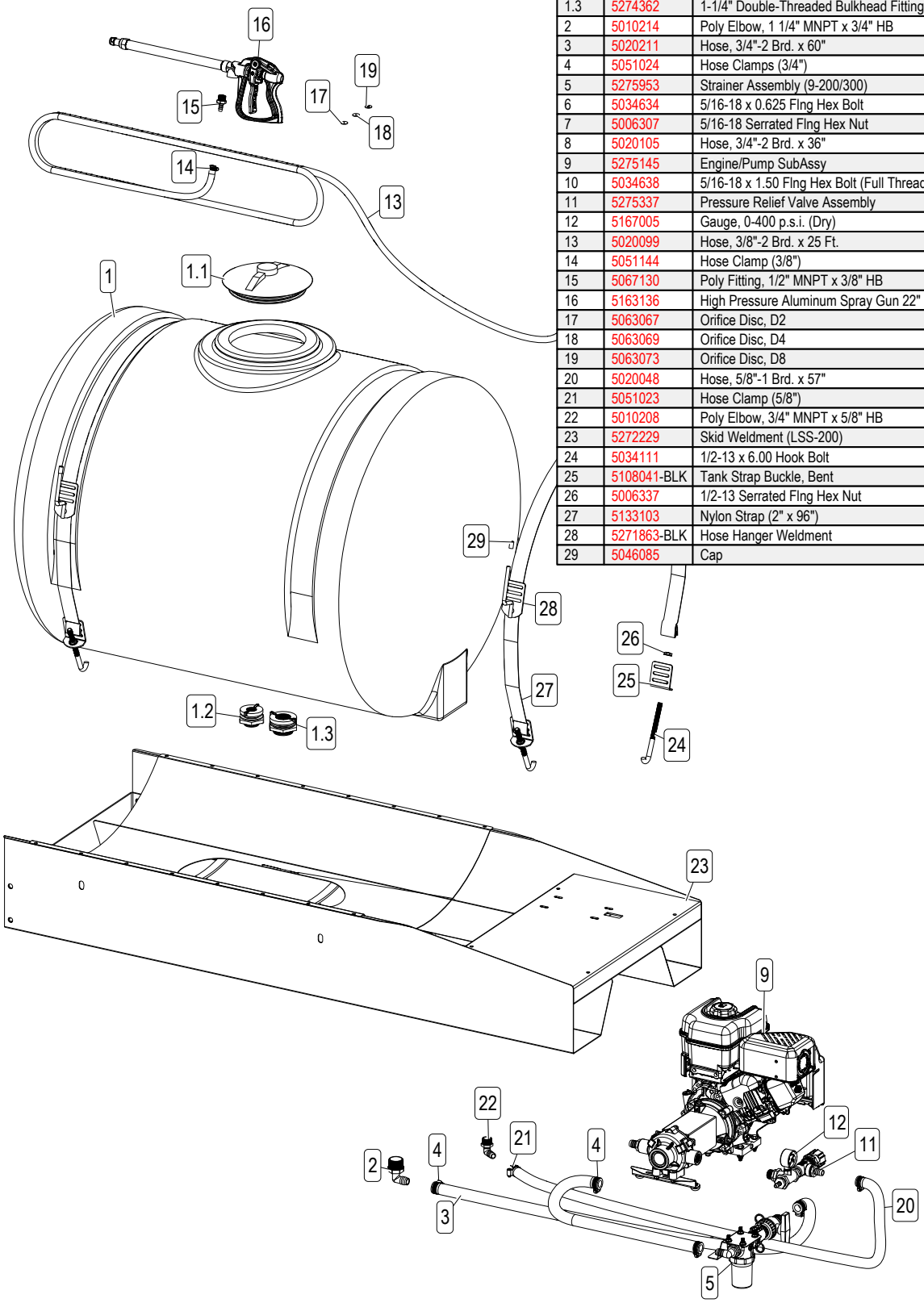
Ref. #	Part #	Description	Qty
1	5169004	200 Gallon Horizontal Tank (White)	1
1.1	63480	8" Lid w/Blue Snap-In Vent	1
1.2	5273736	3/4" Double-Threaded Bulkhead Fitting	1
1.3	5274362	1-1/4" Double-Threaded Bulkhead Fitting	1
2	5010214	Poly Elbow, 1 1/4" MNPT x 3/4" HB	1
3	5020211	Hose, 3/4"-2 Brd. x 60"	1
4	5051024	Hose Clamps (3/4")	4
5	5275953	Strainer Assembly (9-200/300)	1
6	5034634	5/16-18 x 0.625 Flng Hex Bolt	1
7	5006307	5/16-18 Serrated Flng Hex Nut	5
8	5020105	Hose, 3/4"-2 Brd. x 36"	1
9	5275145	Engine/Pump SubAssy	1
10	5034638	5/16-18 x 1.50 Flng Hex Bolt (Full Thread)	4
11	5275337	Pressure Relief Valve Assembly	1
12	5167005	Gauge, 0-400 p.s.i. (Dry)	1
13	5020099	Hose, 3/8"-2 Brd. x 25 Ft.	1
14	5051144	Hose Clamp (3/8")	2
15	5067130	Poly Fitting, 1/2" MNPT x 3/8" HB	1
16	5163136	High Pressure Aluminum Spray Gun 22"	1
17	5063067	Orifice Disc, D2	1
18	5063069	Orifice Disc, D4	1
19	5063073	Orifice Disc, D8	1
20	5020048	Hose, 5/8"-1 Brd. x 57"	1
21	5051023	Hose Clamp (5/8")	2
22	5010208	Poly Elbow, 3/4" MNPT x 5/8" HB	1
23	5272229	Skid Weldment (LSS-200)	1
24	5034111	1/2-13 x 6.00 Hook Bolt	4
25	5108041-BLK	Tank Strap Buckle, Bent	4
26	5006337	1/2-13 Serrated Flng Hex Nut	4
27	5133103	Nylon Strap (2" x 96")	2
28	5271863-BLK	Hose Hanger Weldment	2
29	5046085	Cap	2